Work Order ID 74031

Tuesday, September 20, 2011 12:31:35 PM

Item ID: D3262-043 **Accept** **Setup Start** **Stop**

Revision ID:

Item Name: Canister Assembly

Start Date: 9/20/2011 **Start Qty:** 2.00 **Cust Item ID:**

Required Date: 9/23/2011 **Req'd Qty:** 2.00 **Customer:**

Reference:

Approvals: **Process Plan:** MF **Date:** 11-09-20 **Tooling:** **Date:** **Run Start** **Stop**

QC: **Date:** **SPC (Y/N):** **Date:**

Sequence ID/ Work Center ID	Operation Description	Set Up/ Run Hours	Tool ID	Tool #	Plan Code	Accept Qty	Reject Qty	Reject Number	Insp. Stamp
Draw Nbr	**Revision Nbr**								
D3262	E								
100 Large Fab	Weld per dwg A/R Aluminum rod Batch M118736 Large Fab	0.00				1	Ø	BE 11/09/21	
Large Fab	**Memo** Weld canister assembly as per Dwg D3262 using DT8739 to align fittings	0.00							
110 QC Quality Control	QC9- Inspect visual per QSI004- Fusion Welds	0.00						11.09.21	1
	Memo	0.00							
120 QC Quality Control	QC5- Inspect part completeness to step on W/O	0.00							
	Memo Pressure test as per Dwg D3262	0.00	S 11/07/21				10		

Dart Aerospace Ltd

W/O:		WORK ORDER CHANGES					
DATE	STEP	PROCEDURE CHANGE	By	Date	Qty	Approval Chief Eng / Prod Mgr	Approval QC Inspector

Part No: _____ **PAR #:** _____ **Fault Category:** _____ **NCR:** Yes No **DQA:** _____ **Date:** _____

Resolution: _____ **Disposition:** _____ **QA: N/C Closed:** _____ **Date:** _____

NCR:		WORK ORDER NON-CONFORMANCE (NCR)						
DATE	STEP	Description of NC Section A	Corrective Action Section B			Verification Section C	Approval Chief Eng	Approval QC Inspector
			Initial Chief Eng	Action Description Chief Eng	Sign & Date			

NOTE: Date & initial all entries

H:\fFORMS\Quality Assurance\approved QA\NCRWO RevE

Work Order ID 74031

Tuesday, September 20, 2011 12:31:35 PM

Item ID: D3262-043 **Accept** **Setup Start**

Revision ID: **Stop**

Item Name: Canister Assembly

Start Date: 9/20/2011 **Start Qty:** 2.00 **Cust Item ID:**

Required Date: 9/23/2011 **Req'd Qty:** 2.00 **Customer:**

Reference:

Approvals: **Process Plan:** _____ **Date:** _____ **Tooling:** _____ **Date:** _____ **Run Start**

QC: _____ **Date:** _____ **SPC (Y/N):** _____ **Date:** _____ **Stop**

Sequence ID/ Work Center ID	Operation Description	Set Up/ Run Hours	Tool ID	Tool #	Plan Code	Accept Qty	Reject Qty	Reject Number	Insp. Stamp
130	Chemical Conversion Coat per QSI005 4.1	0.00							
HandFinish	**Memo**	0.00				1 cas	Ø		JM 11/09/21
Hand Finishing									
140	White Gloss(Ref:4.3.5.1) per QSI005 4.3-Alum	0.00							
Powdercoat	**Memo**	0.00							
Powder Coating	****Ensure to mask threads ****								
M118439	START TIME: 11:20								
	OVEN TEMPERATURE: 320 °F								
	FINISH TIME: 11:50								
150	QC3- Inspect Part Finish	0.00							
QC	**Memo**	0.00							
Quality Control									

Accept Qty: 1 Ø JM 11/09/21

Accept Qty: 1 Ø m-f 11/09/22

Accept Qty: 1 BL 11-9-22.

Dart Aerospace Ltd

W/O:		WORK ORDER CHANGES					
DATE	STEP	PROCEDURE CHANGE	By	Date	Qty	Approval Chief Eng / Prod Mgr	Approval QC Inspector

Part No: _____ **PAR #:** _____ **Fault Category:** _____ **NCR:** Yes No **DQA:** _____ **Date:** _____

Resolution: _____ **Disposition:** _____ **QA: N/C Closed:** _____ **Date:** _____

NCR:		WORK ORDER NON-CONFORMANCE (NCR)						
DATE	STEP	Description of NC Section A	Corrective Action Section B			Verification Section C	Approval Chief Eng	Approval QC Inspector
			Initial Chief Eng	Action Description Chief Eng	Sign & Date			

NOTE: Date & initial all entries

H:\fFORMS\Quality Assurance\approved QA\NCRWO RevE

Work Order ID 74031

Tuesday, September 20, 2011 12:31:35 PM

Item ID: D3262-043 **Accept** **Setup Start**

Revision ID: **Stop**

Item Name: Canister Assembly

Start Date: 9/20/2011 **Start Qty:** 2.00 **Cust Item ID:**

Required Date: 9/23/2011 **Req'd Qty:** 2.00 **Customer:**

Reference:

Run Start

Approvals: **Process Plan:** _____ **Date:** _____ **Tooling:** _____ **Date:** _____

Stop

QC: _____ **Date:** _____ **SPC (Y/N):** _____ **Date:** _____

Sequence ID/ Work Center ID	Operation Description	Set Up/ Run Hours	Tool ID	Tool #	Plan Code	Accept Qty	Reject Qty	Reject Number	Insp. Stamp
160	Identify as per dwg & Stock Location:_____	0.00							
Packaging	**Memo** PPP 74030.	0.00						11/9/22	C
Packaging									
170	QC21- Final Inspection - Work Order Release	0.00							
QC	**Memo**	0.00						11/9/22	
Quality Control								MF 11-09-22	

Dart Aerospace Ltd

W/O:		WORK ORDER CHANGES					
DATE	STEP	PROCEDURE CHANGE	By	Date	Qty	Approval Chief Eng / Prod Mgr	Approval QC Inspector

Part No: _____ **PAR #:** _____ **Fault Category:** _____ **NCR:** Yes No **DQA:** _____ **Date:** _____

Resolution: _____ **Disposition:** _____ **QA: N/C Closed:** _____ **Date:** _____

NCR:		WORK ORDER NON-CONFORMANCE (NCR)						
DATE	STEP	Description of NC Section A	Corrective Action Section B			Verification Section C	Approval Chief Eng	Approval QC Inspector
			Initial Chief Eng	Action Description Chief Eng	Sign & Date			

NOTE: Date & initial all entries

H:\fFORMS\Quality Assurance\approved QA\NCRWO RevE

Picklist Print

Tuesday, September 20, 2011 12:31:30 PM

1

Work Order ID: 74031

Parent Item: D3262-043

Parent Item Name: Canister Assembly

Start Date: 9/20/2011 **Required Date:** 9/23/2011

Start Qty: 2.00 **Required Qty:** 2.00

Comments: IPP rev A 10.01.19 new issue EC verified by: DD IPP Rev:B
as per ECN10-571 DD 10.05.10 verified :EC

Component Item ID/ Item Name	Replacement Item ID	Mfg/ Purch	Bin Item	Primary Location	Last Location	Route Seq ID	Unit of Measure	Qty on Hand	Qty per Kit	Total Qty	Qty Issued	Date Issued	Status
D3262-1 Tube		Manufactured	No			100	Each	1.0000	1	2	BE 11/09/21		
				Location		**Loc Qty**		**Loc Code**					
				LG		1							
					71679	1				1			
D3262-5 Cap		Manufactured	No			100	Each	4.0000	2	4		BE 11/09/21	
				Location		**Loc Qty**		**Loc Code**					
				LG		2							
					73085	2				2			
				LG002		2							
					70897	2							

Dart Aerospace Ltd

W/O:		WORK ORDER CHANGES					
DATE	STEP	PROCEDURE CHANGE	By	Date	Qty	Approval Chief Eng / Prod Mgr	Approval QC Inspector

Part No: _____ **PAR #:** _____ **Fault Category:** _____ **NCR:** Yes No **DQA:** _____ **Date:** _____

Resolution: _____ **Disposition:** _____ **QA: N/C Closed:** _____ **Date:** _____

NCR:		WORK ORDER NON-CONFORMANCE (NCR)						
DATE	STEP	Description of NC Section A	Corrective Action Section B			Verification Section C	Approval Chief Eng	Approval QC Inspector
			Initial Chief Eng	Action Description Chief Eng	Sign & Date			

NOTE: Date & initial all entries

H:\fFORMS\Quality Assurance\approved QA\NCRWO RevE

ITEM	QTY -041	P/N	DESCRIPTION
	X	D3262-041	CANISTER ASSEMBLY
1	1	D3262-1	TUBE
2	2	D3262-3	CAP

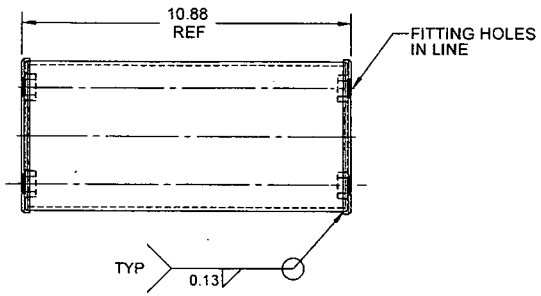

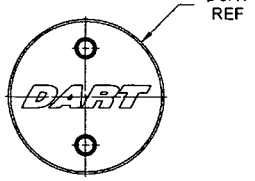

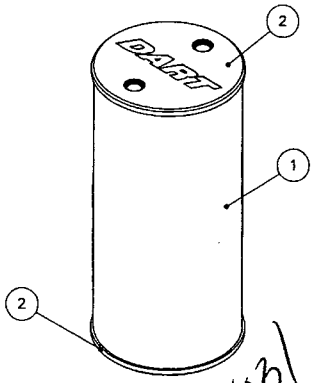

74031

RELEASED
2010 -05- 07

D3262-041 CANISTER ASSEMBLY

NOTES:
1) MATERIAL: N/A
2) FINISH: CHEMICAL CONVERSION COAT PER QSI 005 4.1
POWDER COAT ASSEMBLY WHITE (4.3.5.1) PER DART QSI 005 4.3
3) TOLERANCES: PER DART QSI 018 UNLESS OTHERWISE NOTED
4) UNITS: INCHES UNLESS OTHERWISE NOTED
5) BREAK SHARP EDGES: 0.005 TO 0.010 MAX
6) IDENTIFICATION: IDENTIFY WITH DART P/N "D3262-041" AND B/N USING FINE POINT PERMANENT INK MARKER
7) WEIGHT: 2.51 lbs
8) LIQUID PENETRANT INSPECT PER ASTM E1417 LEVEL 1 OR
PRESSURIZE TO 10 psi AND SUBMERGE UNDER WATER TO CHECK FOR LEAKS

REV.	DESCRIPTION	BY	DATE
E	0.25 WAS 0.45 (ZNC7-4, C7-5); 0.13 WAS 0.33 (ZN B7-4, B7-5); ADD DIMENSION (ZN B1-4, D1-5, B1-5)	RF	10.05.03
D	ADD D3262-043/-5 (ZN B5-2; B5-5); REVISE DIMENSIONS TO EQUAL TOOL DIMENSIONS (ZN B2-4; C2-4) PER CAR 09-004	RF	09.12.30
C	Ø5.165 WAS Ø5.190	RF	06.08.31
B	ADD PRESSURE TESTING OPTION	MB	05.02.14
A	NEW ISSUE	RF	04.05.06

DESIGN	RF	DART AEROSPACE LTD HAWKESBURY, ONTARIO, CANADA	
DRAWN	RF		
CHECKED		DRAWING NO. D3262	REV. E
MFG. APPR.			SHEET 1 OF 5
APPROVED		TITLE	SCALE
DE APPR.		FUEL PURGE CANISTER	NTS
DATE	10.05.03		

Dart Aerospace Ltd

W/O:		WORK ORDER CHANGES					
DATE	STEP	PROCEDURE CHANGE	By	Date	Qty	Approval Chief Eng / Prod Mgr	Approval QC Inspector

Part No: _____ **PAR #:** _____ **Fault Category:** _____ **NCR:** Yes No **DQA:** _____ **Date:** _____

Resolution: _____ **Disposition:** _____ **QA: N/C Closed:** _____ **Date:** _____

NCR:		WORK ORDER NON-CONFORMANCE (NCR)						
DATE	STEP	Description of NC Section A	Corrective Action Section B			Verification Section C	Approval Chief Eng	Approval QC Inspector
			Initial Chief Eng	Action Description Chief Eng	Sign & Date			

NOTE: Date & initial all entries

H:\fFORMS\Quality Assurance\approved QA\NCRWO RevE

ITEM	QTY -043	P/N	DESCRIPTION
	X	D3262-043	CANISTER ASSEMBLY
1	1	D3262-1	TUBE
2	2	D3262-5	CAP

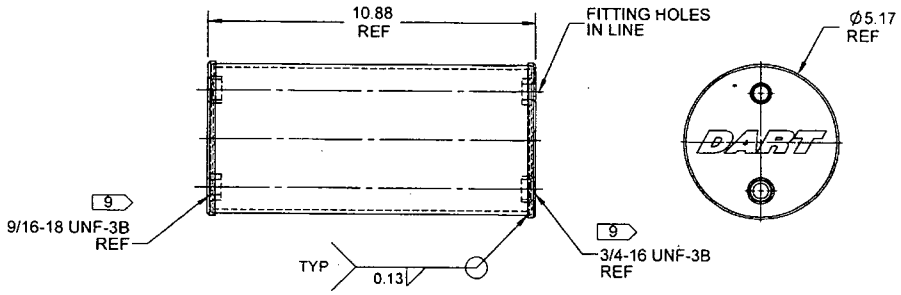

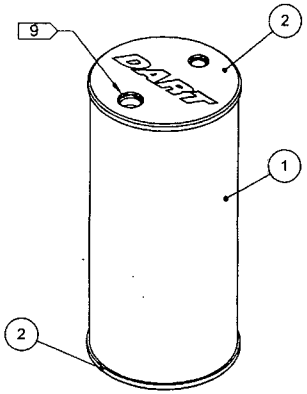

D3262-043 CANISTER ASSEMBLY

#74031

RELEASED
2010 -05- 07

NOTES:
1) MATERIAL: N/A
2) FINISH: CHEMICAL CONVERSION COAT PER QSI 005 4.1
POWDER COAT ASSEMBLY WHITE (4.3.5.1) PER DART QSI 005 4.3
3) TOLERANCES: PER DART QSI 018 UNLESS OTHERWISE NOTED
4) UNITS: INCHES UNLESS OTHERWISE NOTED
5) BREAK SHARP EDGES: 0.005 TO 0.010 MAX
6) IDENTIFICATION: IDENTIFY WITH DART P/N "D3262-043" AND B/N USING FINE POINT PERMANENT INK MARKER
7) WEIGHT: 2.50 lbs
8) LIQUID PENETRANT INSPECT PER ASTM E1417 LEVEL 1 OR
PRESSURIZE TO 10 psi AND SUBMERGE UNDER WATER TO CHECK FOR LEAKS
9) WELD CAPS WITH 3/4-16 TAP TOP HOLE IN LINE WITH 9/16-18 TAP BOTTOM HOLE

DESIGN	RF	**DART AEROSPACE LTD** HAWKESBURY, ONTARIO, CANADA
DRAWN	RF	
CHECKED		DRAWING NO. D3262 — REV. E — SHEET 2 OF 5
MFG. APPR.		
APPROVED		TITLE — SCALE
DE APPR.		FUEL PURGE CANISTER — NTS
DATE	10.05.03	

Dart Aerospace Ltd

W/O:		WORK ORDER CHANGES					
DATE	STEP	PROCEDURE CHANGE	By	Date	Qty	Approval Chief Eng / Prod Mgr	Approval QC Inspector

Part No: _____ **PAR #:** _____ **Fault Category:** _____ **NCR:** Yes No **DQA:** _____ **Date:** _____

Resolution: _____ **Disposition:** _____ **QA: N/C Closed:** _____ **Date:** _____

NCR:		WORK ORDER NON-CONFORMANCE (NCR)						
DATE	STEP	Description of NC Section A	Corrective Action Section B			Verification Section C	Approval Chief Eng	Approval QC Inspector
			Initial Chief Eng	Action Description Chief Eng	Sign & Date			

NOTE: Date & initial all entries

H:\fFORMS\Quality Assurance\approved QA\NCRWO RevE

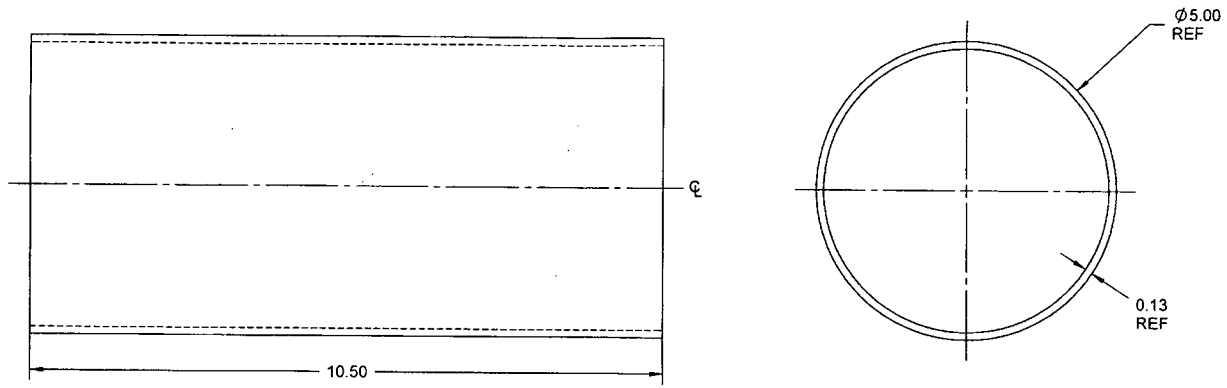

D3262-1 TUBE

74031

RELEASED
2010 -05- 07

NOTES:
1) MATERIAL: 6061-T6 OR 6061-T62 ALUMINUM TUBING, 5.00 OD x 0.125 WALL
PER WW-T-700/6 OR AMS 4080 OR AMS 4082 OR QQ-A-200/8 OR QQ-A-225/8
REF. DART SPEC. M6061T6T5.000W.125
2) FINISH: NONE
3) TOLERANCES: PER DART QSI 018 UNLESS OTHERWISE NOTED
4) UNITS: INCHES UNLESS OTHERWISE NOTED
5) BREAK SHARP EDGES: 0.005 TO 0.010 MAX
6) IDENTIFICATION: NONE
7) WEIGHT: 1.96 lbs
8) PART IS SYMMETRICAL ABOUT CENTERLINE

DESIGN	RF	**DART AEROSPACE LTD** HAWKESBURY, ONTARIO, CANADA
DRAWN	RF	
CHECKED		DRAWING NO. D3262 — REV. E — SHEET 3 OF 5
MFG. APPR.		
APPROVED		TITLE: FUEL PURGE CANISTER — SCALE: NTS
DE APPR.		
DATE	10.05.03	

Dart Aerospace Ltd

W/O:		WORK ORDER CHANGES					
DATE	STEP	PROCEDURE CHANGE	By	Date	Qty	Approval Chief Eng / Prod Mgr	Approval QC Inspector

Part No: _____ **PAR #:** _____ **Fault Category:** _____ **NCR:** Yes No **DQA:** _____ **Date:** _____

Resolution: _____ **Disposition:** _____ **QA: N/C Closed:** _____ **Date:** _____

NCR:		WORK ORDER NON-CONFORMANCE (NCR)						
DATE	STEP	Description of NC Section A	Corrective Action Section B			Verification Section C	Approval Chief Eng	Approval QC Inspector
			Initial Chief Eng	Action Description Chief Eng	Sign & Date			

NOTE: Date & initial all entries

H:\fFORMS\Quality Assurance\approved QA\NCRWO RevE

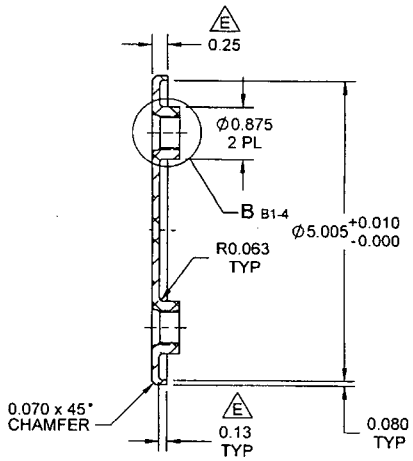

SECTION A-A C5-4

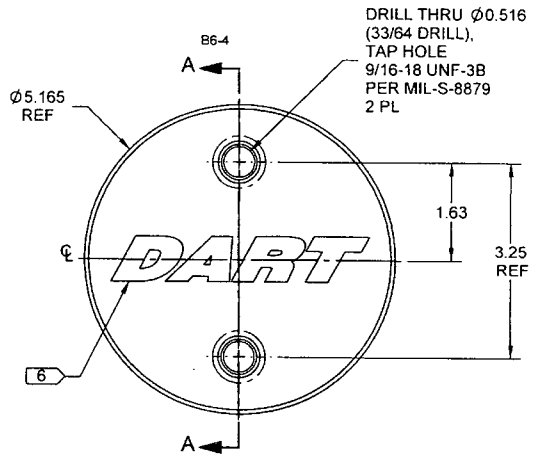

D3262-3 CAP

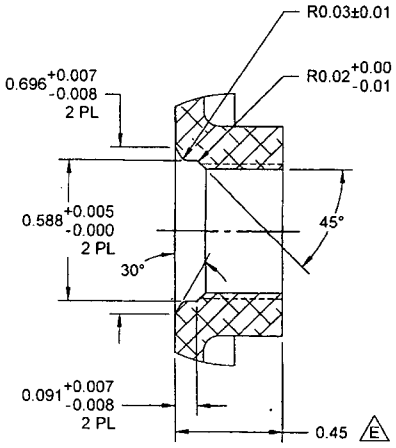

DETAIL B C7-4
SCALE 2X

#7431

RELEASED
2010 -05- 07

NOTES:
1) MATERIAL: 6061-T6/T651 ALUMINUM BAR
PER QQ-A-200/8 OR QQ-A-225/8
REF. DART SPEC. M6061T6B
2) FINISH: NONE
3) TOLERANCES: PER DART QSI 018 UNLESS OTHERWISE NOTED
4) UNITS: INCHES UNLESS OTHERWISE NOTED
5) BREAK SHARP EDGES: 0.005 TO 0.010 MAX
6) IDENTIFICATION: ENGRAVE 'DART' LOGO AS SHOWN USING 0.75 HIGH x 0.010 DEEP (MAX) LETTERS WITH TOOL RADIUS OF 0.25 MIN
7) WEIGHT: 0.28 lbs
8) PART IS SYMMETRICAL ABOUT CENTERLINE

DESIGN	RF	**DART AEROSPACE LTD** HAWKESBURY, ONTARIO, CANADA
DRAWN	RF	
CHECKED		DRAWING NO. D3262 — REV. E — SHEET 4 OF 5
MFG. APPR.		
APPROVED		TITLE: FUEL PURGE CANISTER — SCALE: NTS
DE APPR.		
DATE	10.05.03	

Dart Aerospace Ltd

W/O:		WORK ORDER CHANGES					
DATE	STEP	PROCEDURE CHANGE	By	Date	Qty	Approval Chief Eng / Prod Mgr	Approval QC Inspector

Part No: _____ **PAR #:** _____ **Fault Category:** _____ **NCR:** Yes No **DQA:** _____ **Date:** _____

Resolution: _____ **Disposition:** _____ **QA: N/C Closed:** _____ **Date:** _____

NCR:		WORK ORDER NON-CONFORMANCE (NCR)						
DATE	STEP	Description of NC Section A	Corrective Action Section B			Verification Section C	Approval Chief Eng	Approval QC Inspector
			Initial Chief Eng	Action Description Chief Eng	Sign & Date			

NOTE: Date & initial all entries

H:\fFORMS\Quality Assurance\approved QA\NCRWO RevE

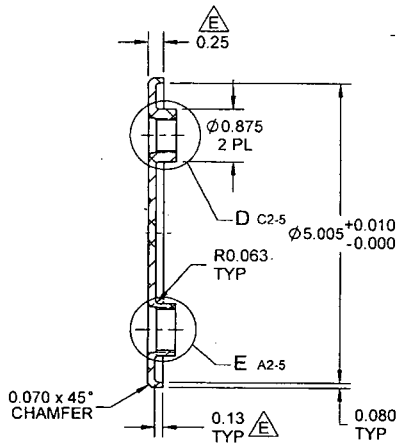

SECTION C-C D5-5

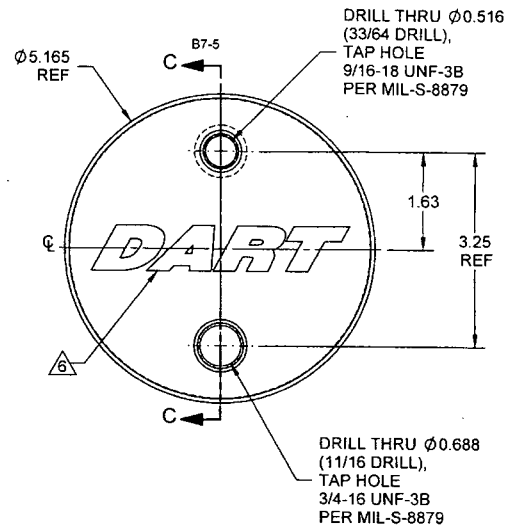

D3262-5 CAP

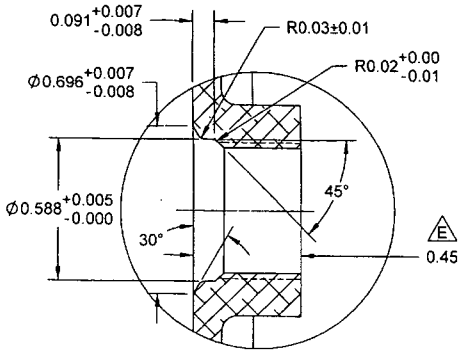

DETAIL D C7-5
SCALE 2X

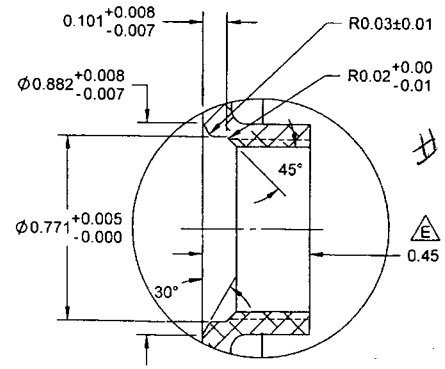

#74031

DETAIL E B7-5
SCALE 2X

RELEASED
2010 -05- 07

NOTES:
1) MATERIAL: 6061-T6/T651 ALUMINUM BAR
PER QQ-A-200/8 OR QQ-A-225/8
REF. DART SPEC. M6061T6B
2) FINISH: NONE
3) TOLERANCES: PER DART QSI 018 UNLESS OTHERWISE NOTED
4) UNITS: INCHES UNLESS OTHERWISE NOTED
5) BREAK SHARP EDGES: 0.005 TO 0.010 MAX
6) IDENTIFICATION: ENGRAVE 'DART' LOGO AS SHOWN USING 0.75 HIGH x 0.010 DEEP (MAX) LETTERS WITH TOOL RADIUS OF 0.25 MIN
7) WEIGHT: 0.27 lbs
8) PART IS SYMMETRICAL ABOUT CENTERLINE

DESIGN	RF	**DART AEROSPACE LTD** HAWKESBURY, ONTARIO, CANADA
DRAWN	RF	
CHECKED		DRAWING NO. D3262 — REV. E — SHEET 5 OF 5
MFG. APPR.		
APPROVED		TITLE: FUEL PURGE CANISTER — SCALE: NTS
DE APPR.		
DATE	10.05.03	

Dart Aerospace Ltd

W/O:		WORK ORDER CHANGES					
DATE	STEP	PROCEDURE CHANGE	By	Date	Qty	Approval Chief Eng / Prod Mgr	Approval QC Inspector

Part No: _____ **PAR #:** _____ **Fault Category:** _____ **NCR:** Yes No **DQA:** _____ **Date:** _____

Resolution: _____ **Disposition:** _____ **QA: N/C Closed:** _____ **Date:** _____

NCR:		WORK ORDER NON-CONFORMANCE (NCR)						
DATE	STEP	Description of NC Section A	Corrective Action Section B			Verification Section C	Approval Chief Eng	Approval QC Inspector
			Initial Chief Eng	Action Description Chief Eng	Sign & Date			

NOTE: Date & initial all entries

H:\fFORMS\Quality Assurance\approved QA\NCRWO RevE